Model 30 & Model 599 LITTLE TREES®
5-Column Vender
Rear Panel Mounting Diagram

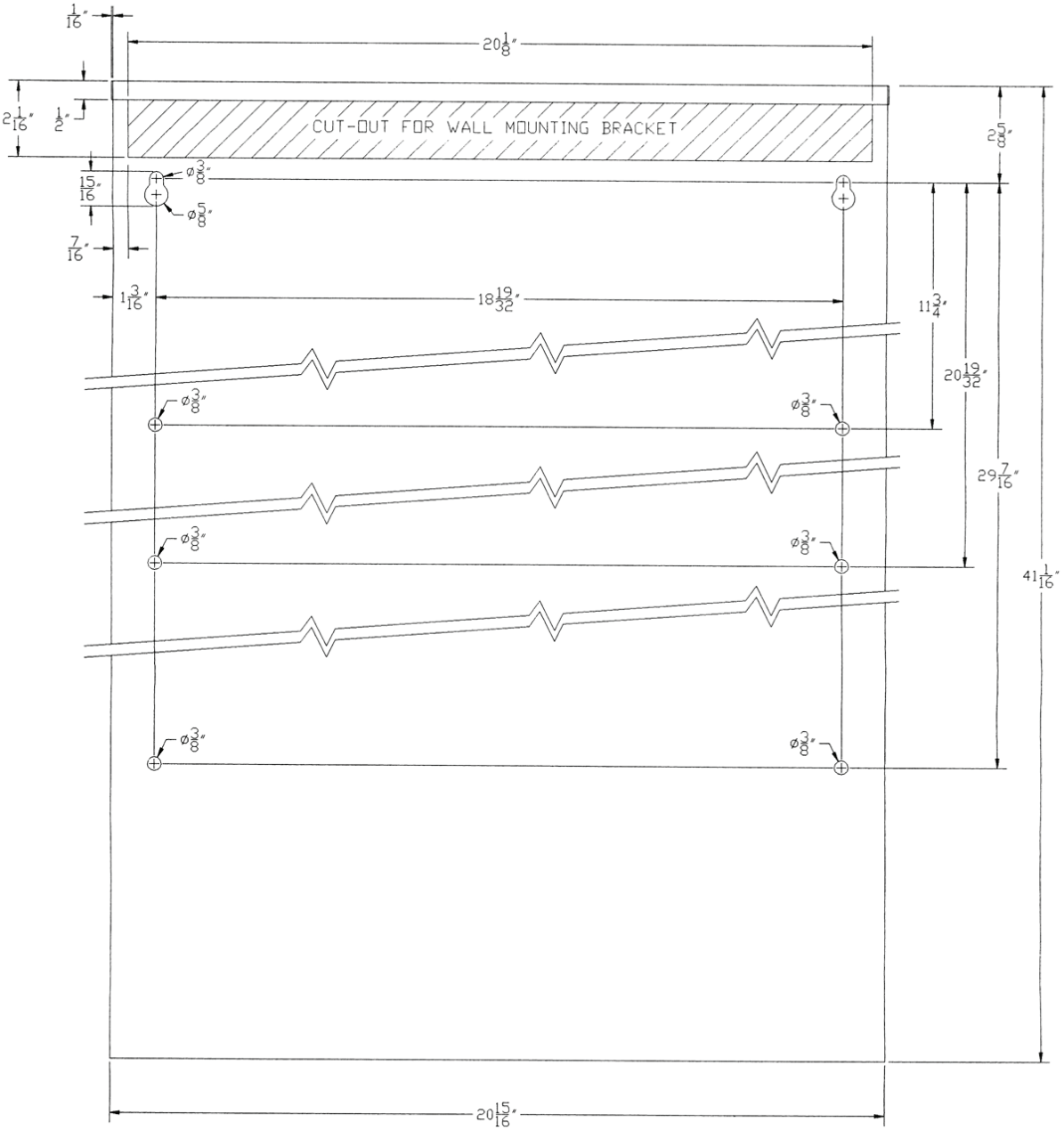

Cabinet Back Panel Diagram
(Rear View)